KREATYWNY ENERGY POLSKA

Zagreb Communications 5g base station partner





Zagreb Communications 5g base station partner

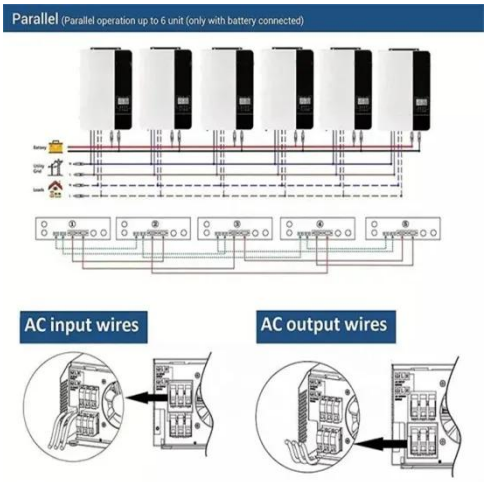

Press-Details , Hrvatski Telekom d.d.

Through 600 operational 5G base stations, Hrvatski Telekom at the moment covers a population of 2 million, with as many as 149, or quarter of all 5G base stations operating on 3.6 GHz ...

Hrvatski Telekom Unveils Smart Airport Initiative Using Private 5G ...

In collaboration with Markoja, the Faculty of Transport and Traffic Sciences in Zagreb, and the airports of Zagreb, Zadar, and Pula, Hrvatski Telekom has introduced the NextGen 5G ...





Press-Details , Hrvatski Telekom d.d.

As lead partner, Hrvatski Telekom submitted NextGen 5G Airports under the CEF Digital subprogramme and the call "5G Large Scale Pilots - 5G and Edge for Smart Communities - Works", ...

HT's project to build 5G networks for three airports receives EU co

The 'NextGen 5G Airports' project of Hrvatski Telekom has been selected for co-financing under the CEF (Connecting Europe Facility) program of the European Commission, in ...





Hrvatski Telekom's Private 5G Networks Transform Croatia's Airport

Hrvatski Telekom is stepping up with a robust plan: the NextGen 5G Airports project. This initiative will deliver Private 5G Networks to three key Croatian airports--Zagreb, Zadar, and ...

Press-Details , Hrvatski Telekom d.d.

The project encompasses the modernization of infrastructure, transport capacities and radio equipment that should be finalized by the end of 2019. In the first half of the year, HT replaced ...



Hrvatski Telekom, partners develop smart airport project

If the CEF co-financing is approved, the airports in Zagreb, Zadar, and Pula could



use private 5G networks free of charge for three years, granting them access to the most advanced ...

Hrvatski Telekom to Build Croatia's First Three Smart Airports with EUR5

The consortium includes the airports of Zagreb, Zadar, and Pula, alongside infrastructure company Markoja and the University of Zagreb's Faculty of Transport and Traffic Sciences, which will ...





HT, A1, Telemach announce major investments as government rubs

Today, a real-world 5G experience will be available to the citizens of Osijek, where the equipment was previously installed to test 5G technology, and very soon the citizens of Zagreb will experience ...

Operator Watch Blog: 5G is Growing Slowly in Croatia

The Croatian government and telecom

operators have been working together to modernize the country's mobile infrastructure, especially with the 5G rollout. Both HT and A1 have ...



Contact Us

For catalog requests, pricing, or partnerships, please visit: https://www.kreatywny-dom.pl