KREATYWNY ENERGY POLSKA

# Kuala Lumpur quality solar container battery manufacturer

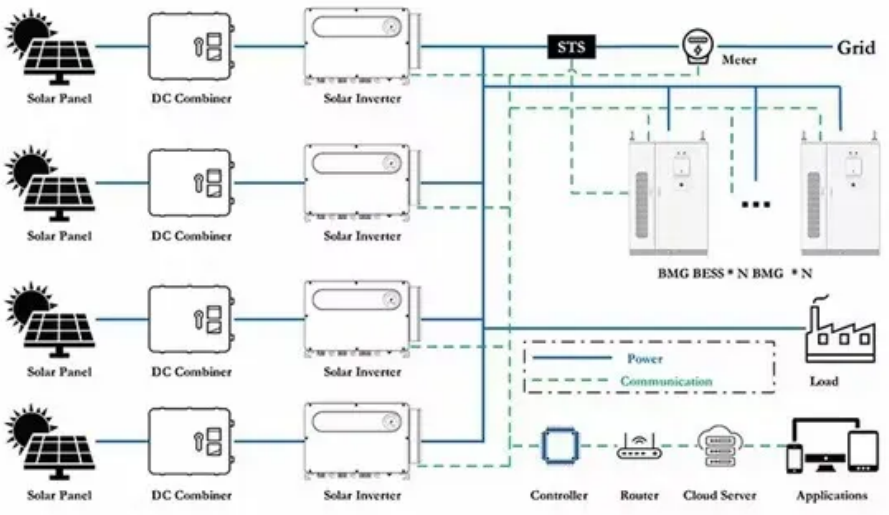

## Kuala Lumpur quality solar container battery manufacturer



### Kuala Lumpur solar container battery brand ranking

As Malaysia strides towards an eco-conscious future, the integration of Battery Energy Storage Systems (BESS) stands at the forefront of this transformative journey.

### Energy Storage Containers in Kuala Lumpur: Solutions for ...

As Malaysia's energy demands grow, Kuala Lumpur emerges as a strategic hub for modular energy storage solutions. This article explores how factory-made energy storage containers address power ...





### Energy Storage Company Malaysia , Ditrolic

We help you store your energy until it's needed. Our battery energy storage system solutions are available as a stand-alone system or paired with an integrated system package, whether it be solar, ...

### Top 74 Solar Battery Companies in

## Malaysia (2026) , ensun

The solar battery industry in Malaysia presents several key considerations for potential investors and stakeholders. First, understanding local regulations and government incentives is crucial, as ...





## Power & Grid Sdn Bhd

At Power & Grid Sdn Bhd, we provide cutting-edge battery energy storage systems that help reduce reliance on fossil fuels and stabilize energy supply. Built on over two decades of global R& D and ...

## Top 7 Solar Battery Manufacturers in Malaysia : ...

Explore top solar battery manufacturers in Malaysia, their history, products, advantages, and local certifications that guarantee safety and quality.

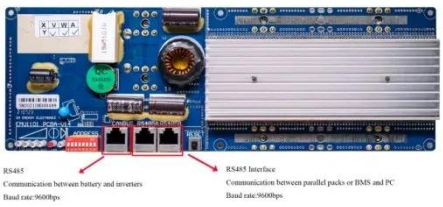


## High Quality , Solar Battery System Supplier ...

Solar Battery System Supplier Malaysia is to enhance your energy storage solutions for optimal efficiency. Contact us today for further information!

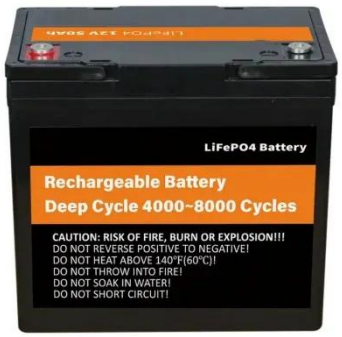


## Solar Container , Large Mobile Solar Power Systems

Professional mobile solar container solutions with 20-200kWp solar arrays for mining, construction and off-grid applications.







## Solar Batteries MSB Selangor, Kuala Lumpur (KL), Malaysia

Skyace (M) Sdn Bhd - Solar Batteries MSB Selangor, Kuala Lumpur (KL), Malaysia, Shah Alam Battery, Supplier, Supply, Manufacturer, The new improved technology gained from years of experience of ...

## Top 10 battery manufacturers in Malaysia

This article will introduce the top 10 battery manufacturers in Malaysia including yokohama batteries, Amaron

Battery, ABM Fujiya Berhad, ABM Fujiya Berhad, Century Motolite ...



## Contact Us

For catalog requests, pricing, or partnerships, please visit: https://www.kreatywny-dom.pl