KREATYWNY ENERGY POLSKA

Comparison of 250kW smart photovoltaic energy storage cabinet and wind power generation



Overview

This comprehensive comparison will help you understand which renewable energy source best fits your specific needs, location, and budget. The study provides a study on energy storage technologies for photovoltaic and wind systems in response to the growing demand for low-carbon transportation. Energy storage systems (ESSs) have become an emerging area of renewed interest as a critical factor in renewable energy systems. The. converters, energy management monitoring systems, power distribut quisition of local load power, photovoltaic power generation priority is self-generation and self-use, and surplus electricity stora . To address this challenge and simultaneously reduce environmental pollution, a hybrid energy storage system containing hydrogen energy storage (HES) and compressed air energy storage (CAES) are proposed. The system aims to reconfigure the energy storage devices by an economical means and. Solar Energy Dominates Residential Applications: With installation costs of $20,000-$30,000 compared to wind's $50,000-$75,000, solar energy offers a significantly lower barrier to entry for homeowners. Solar installations achieve 5. 6 gigawatts capacity growth in early 2023, while wind turbines generate enough electricity to power 9% of American homes. But which is better?

We will compare the two energy generation.

Comparison of 250kW smart photovoltaic energy storage cabinet ar



Solar Energy vs Wind Energy: Cost, Efficiency, Applicability, and

We will compare the two energy generation technologies on cost, efficiency, applicability and environmental impact. Wind and solar technologies demonstrate remarkable cost-efficiency ...

Optimal capacity allocation and economic evaluation of hybrid energy

To address this challenge and simultaneously reduce environmental pollution, a hybrid energy storage system containing hydrogen energy storage (HES) and compressed air energy ...

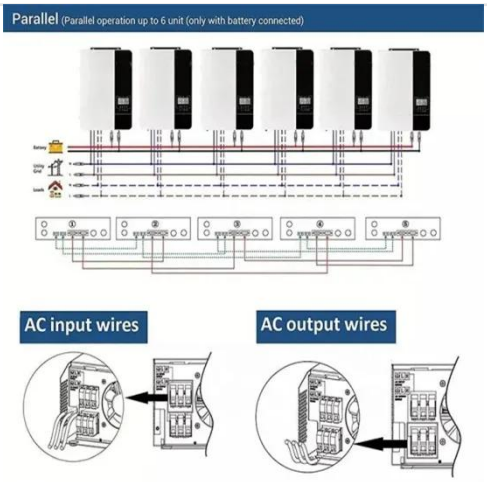



Energy Storage Systems for Photovoltaic and Wind Systems: A ...

A presentation of the theorem of PV/wind + battery energy storage systems (BESSs), highlighting how combining PV or wind power with BESSs can enhance renewable energy ...

Energy storage system based on hybrid wind and photovoltaic

To resolve these shortcomings, this paper proposed a novel Energy Storage System Based on Hybrid Wind and Photovoltaic Technologies techniques developed for sustainable hybrid ...





(PDF) Energy Storage Systems for Photovoltaic and Wind

Energy storage systems (ESSs) have become an emerging area of renewed interest as a critical factor in renewable energy systems. The technology choice depends essentially on system

Capacity planning for wind, solar, thermal and energy storage in power

To address this challenge, this article proposes a coupled electricity-carbon market and wind-solar-storage complementary hybrid power generation system model, aiming to maximize ...



Solar Energy Vs Wind Energy: Complete 2025 Comparison Guide

Compare solar and wind energy efficiency, costs, and environmental impact. Expert analysis helps you choose



the best renewable energy for your home or business in 2025.

A comprehensive review of wind power integration and energy storage

Integrating wind power with energy storage technologies is crucial for frequency regulation in modern power systems, ensuring the reliable and cost-effective operation of power ...





250kW/500kWh Outdoor Cabinet Energy Storage System ...

It adopts door-mounted embedded integrated air conditioning, which does not occupy cabinet space, improves the available space of outdoor cabinets, has better structural integrity at the ...

(PDF) Energy Storage Systems for Photovoltaic and ...

Energy storage systems (ESSs) have become an emerging area ...





Wind Power, Photovoltaic, and Energy Storage: The Trifecta of ...

Enter energy storage - the unsung hero keeping your lights on during nature's downtime. The global renewable energy landscape is undergoing a seismic shift, with wind power and photovoltaic (PV) ...

Contact Us

For catalog requests, pricing, or partnerships, please visit: https://www.kreatywny-dom.pl